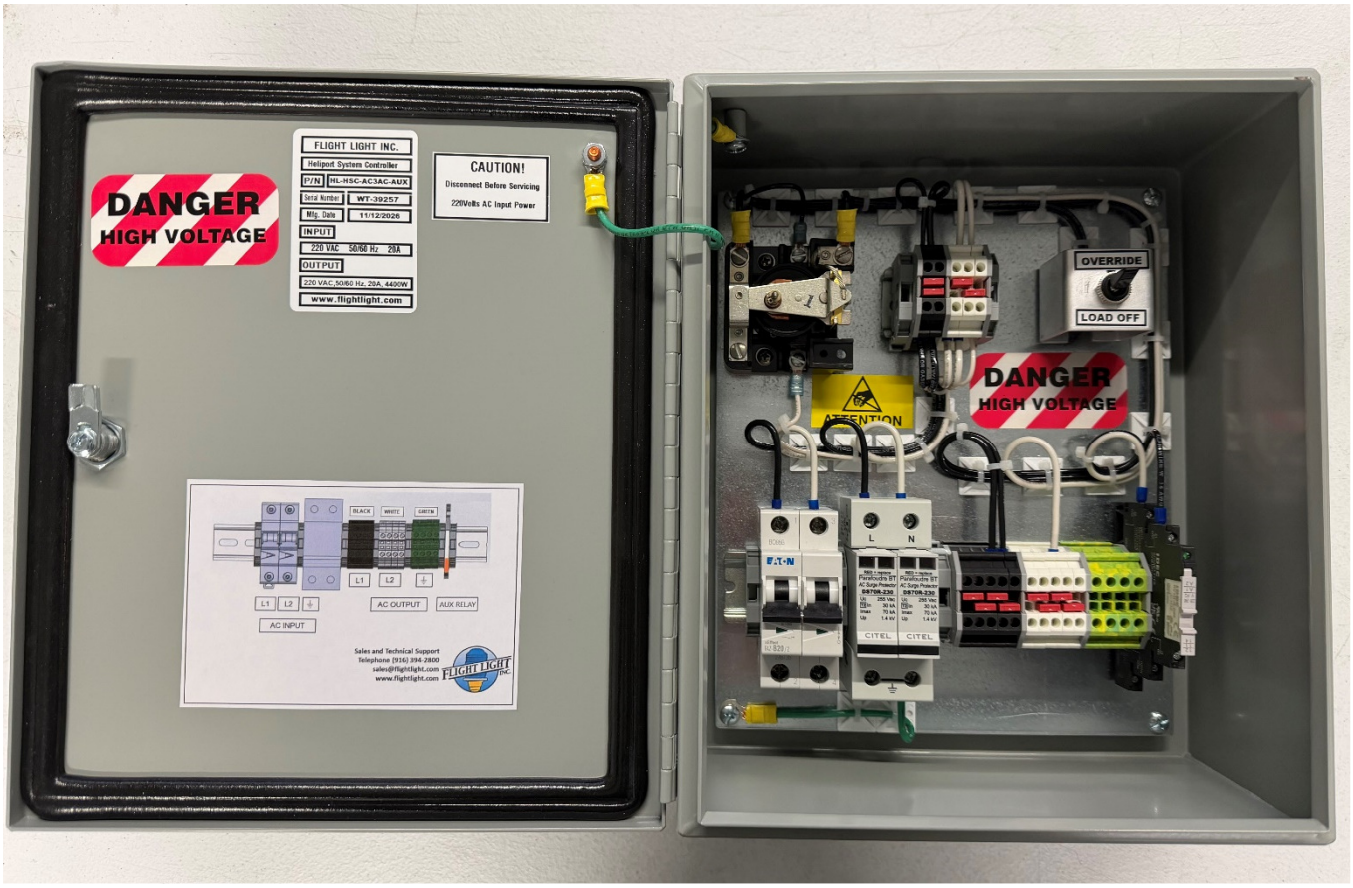

Heliport System Controller with AUX Relay

HL-HSC-AC3AC-AUX

Operation Manual

Heliport 220VAC with AUX Relay Controller

Installation Instructions

HL-HSC-AC3AC-AUX

Your Heliport Controller has been designed with safety and protection features to provide years of service with minimum maintenance when used properly. Please follow these instructions for proper installation and operation. A Circuit Breaker restricts the load current to 20A maximum. The AUX relay provides connection and control of an external voltage source.

CAUTION! This system may have high voltages and currents while it is operating, it is recommended to use high voltage gloves whenever the circuit breaker is ON.

Installation Mounting Instructions

a. The enclosure mounting location should not be close to a heat source.



Enclosure Showing Mounting Tabs

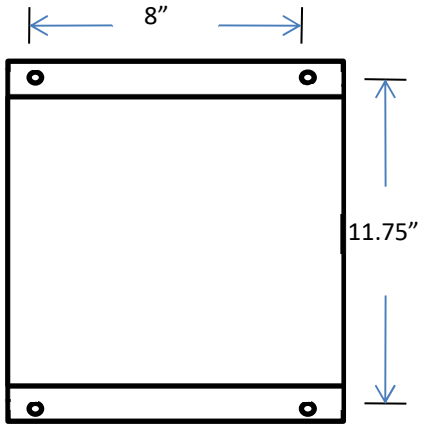

Mounting Layout

b. The controller enclosure is NEMA 4 compliant, and is usually mounted to a wall utilizing the four mounting holes located on the enclosure’s mounting tabs (mounting hardware supplied by installer). The overall dimensions of the enclosure body are 12”H x 10”W x 5”D, with the mounting dimensions shown above.

Electrical Installation Instructions

a. It is recommended to drill two access holes on the bottom side of the enclosure, one for cables into the enclosure, and one for output cabling to the load devices. It is also recommended to use strain-relief or rubber bushings to cushion the wire from the enclosure sharp edges. **Flight Light Inc.is not responsible for damage or incomplete sealing caused by this process.**

b. Connections from the AC source power to the controller inputs are shown on the left side of the Wiring Diagram in Figure 1 and listed in Table 1 below.

c. Connection from the Controller AC outputs to the Load are shown on the right side of the Wiring Diagram in Figure 1 and listed in Table 1.

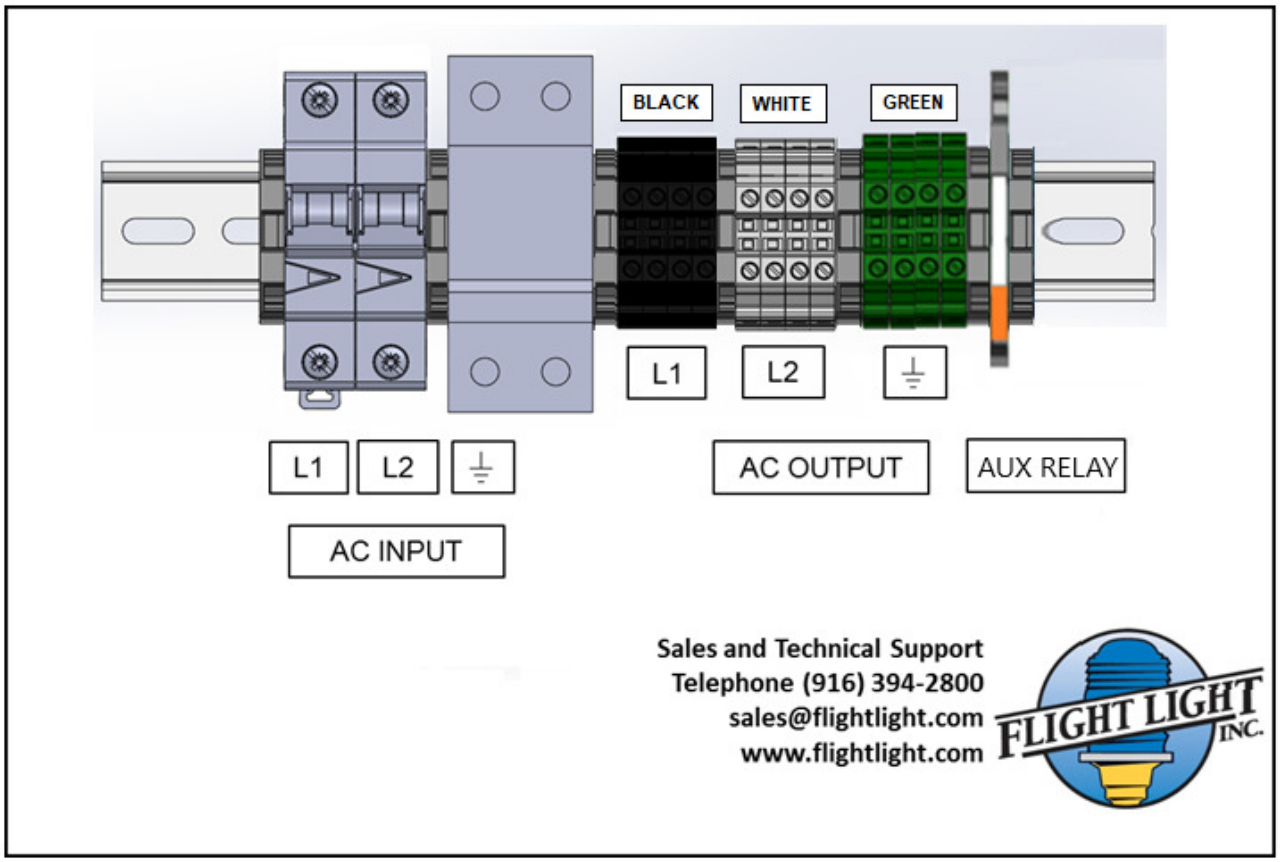

Figure 1: Customer Interface Wiring Diagram

AC Input Wiring
"L1", 20A, 2-pole Circuit Breaker AC Line 1 Input.
"L2", 20A, 2-pole Circuit Breaker AC Line 2 Input.
"Ground", Surge Arrester.
AC Output (Load) Wiring
"L1" Black Terminal Block: AC Line 1.
"L2" The White Terminal Block: AC Line 2.
"Ground", Green Terminal Block

Table 1: Controller Wiring Instructions

Auxiliary Relay Connection

-The AUX relay provides connection and control of an external voltage source. The relay will activate/close the circuit at #14 Normally Open connection when the Output Load (L1) gets energized.

AUXILIARY RELAY (CONTACT RATING: 250VAC MAX, 6A)

#14 NO (Normally Open)

#12 NC (Normally Closed)

#11 COM (Common)

Operation with Override Switch

a. When the switch is placed in "**OVERRIDE**" the system will remain ON indefinitely. This position provides a manually-operated mode.

b. When the switch is placed in "**LOAD OFF**" the system will turn OFF the Load only. **Caution:** the controller's internal components will remain energized at 220VAC. To completely turn off/de-energize the controller, set the input circuit breaker to the OFF/Down position.

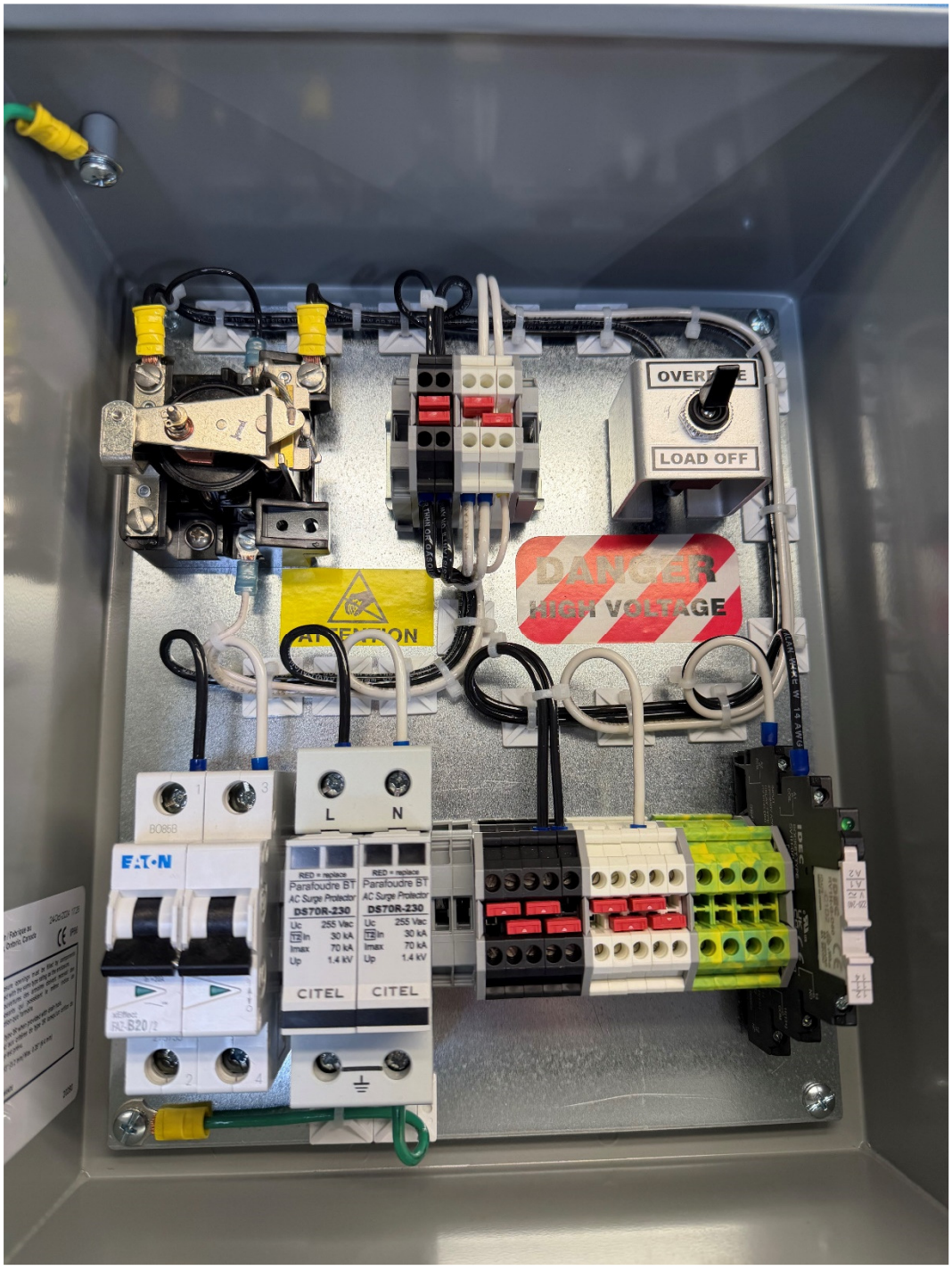
LOAD OFF
DANGER
HIGH VOLTAGE
L
N
EATON
CITEL
CITEL

System Trouble Shooting

If your system does not operate as expected here are some suggestions to help locate the source of the problem:

a. Input Voltage Verification: With the circuit breaker in the OFF position, verify that you have 220VAC between the circuit breaker L1 and L2 terminals If your system does not pass this test you may have a problem with your input wiring or voltage source.

b. Output Voltage Verification: If your system had the correct input voltage. Make sure switch is set to OVERRIDE and measure voltage at the output terminal blocks. L1 (Black Terminal block) and L2 (White Terminal Blocks). If you have 220VAC at the L1 (Black Terminal block) and L2 (White Terminal Blocks), but your lights/load does not energize, you may have a problem with your load wiring or devices. A test 220VAC light bulb may be used for testing between one of the L1 black output terminal blocks and L2 white terminal blocks.

c. Please contact Flight Light, Inc at (916) 394-2800 for support and help with troubleshooting your system.

Light Fixture Connection

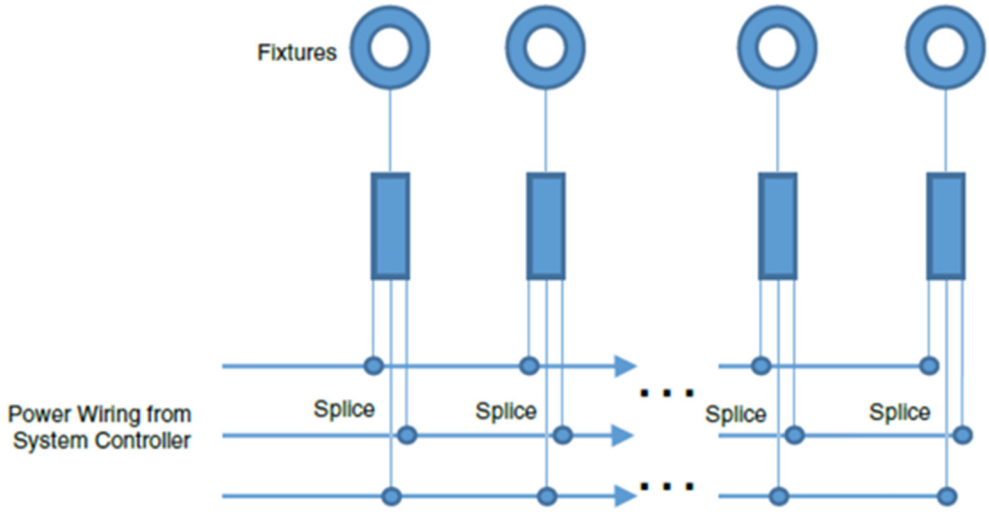

Parallel Connection at Each Base Can

Replacement Parts List

You may contact Flight Light, Inc at (916) 394-2800 for replacement parts according to the following chart:

Name	Part Number
Main Relay	27-PRD-5AY0-240
Aux Relay	27-4190N14
20A Circuit Breaker	27-FAZ-C20/2
Lightning Arrestor	27-DS72RS-230

WARNING:

MOUNTING BASE CAN IS NOT A WATER-PROOF JUNCTION BOX.

WIRE SPLICING MUST BE DONE INSIDE A UL APPROVED WATER-PROOF JUNCTION BOX.

WARRANTY WILL BE VOID IF INSTALLATION IS NOT DONE PROPERLY.

Sales and Technical Support

Telephone (916) 394-2800

sales@flightlight.com

www.flightlight.com