L868AA: 5" Shallow Base (P/N BA-725-5-2)

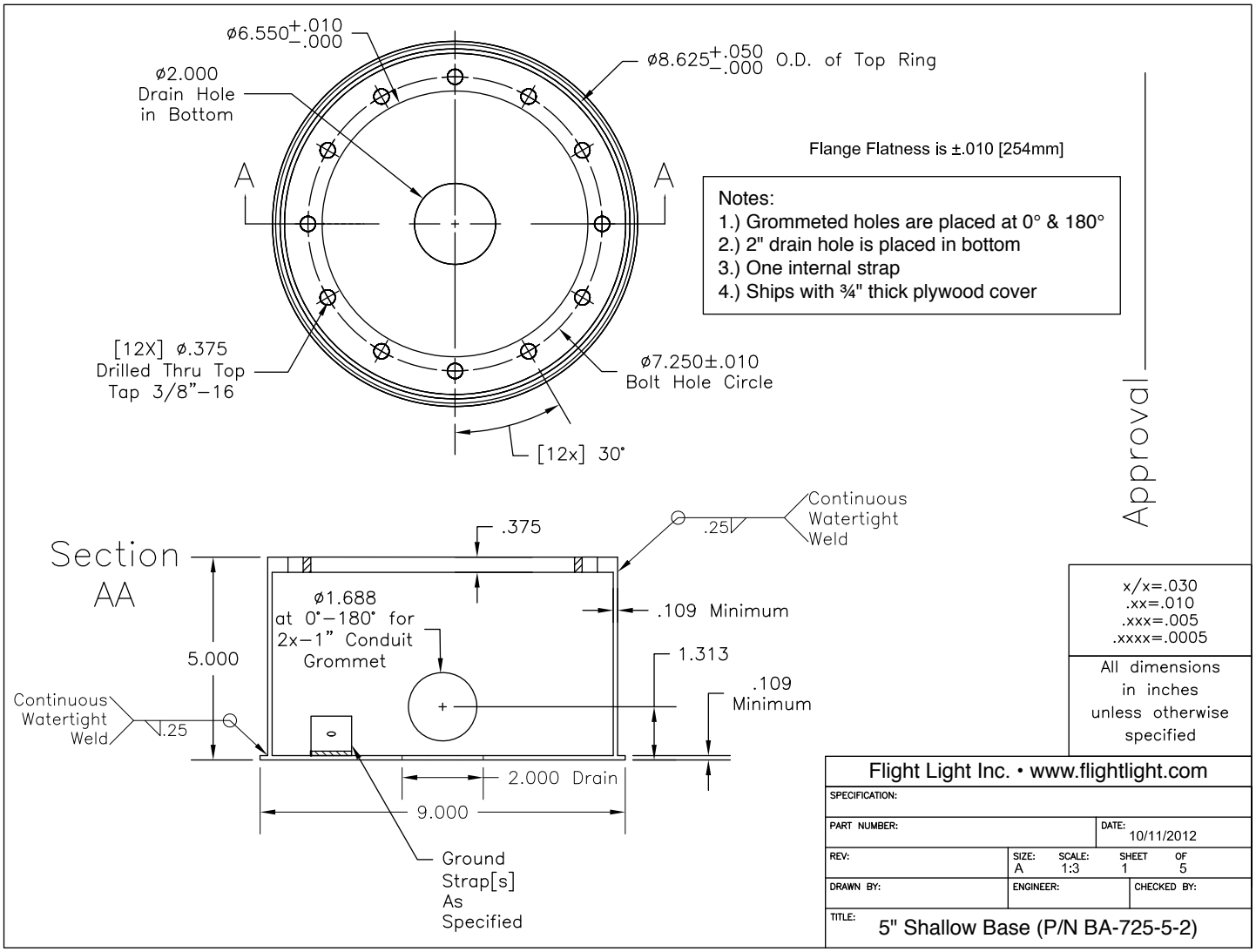

Please note:
Model #BA-725-5-2 has a ¾" thick plywood cover.

+1.800.806.3548 USA
+1.916.394.2800 Worldwide

www.flightlight.com
sales@flightlight.com

Flight Light Inc., 2708 47th Ave.
Sacramento, CA, 95822, USA

Product specifications may be subject to change without prior notice. Verify current specifications when ordering. © Flight Light Inc. | 4/11/2024